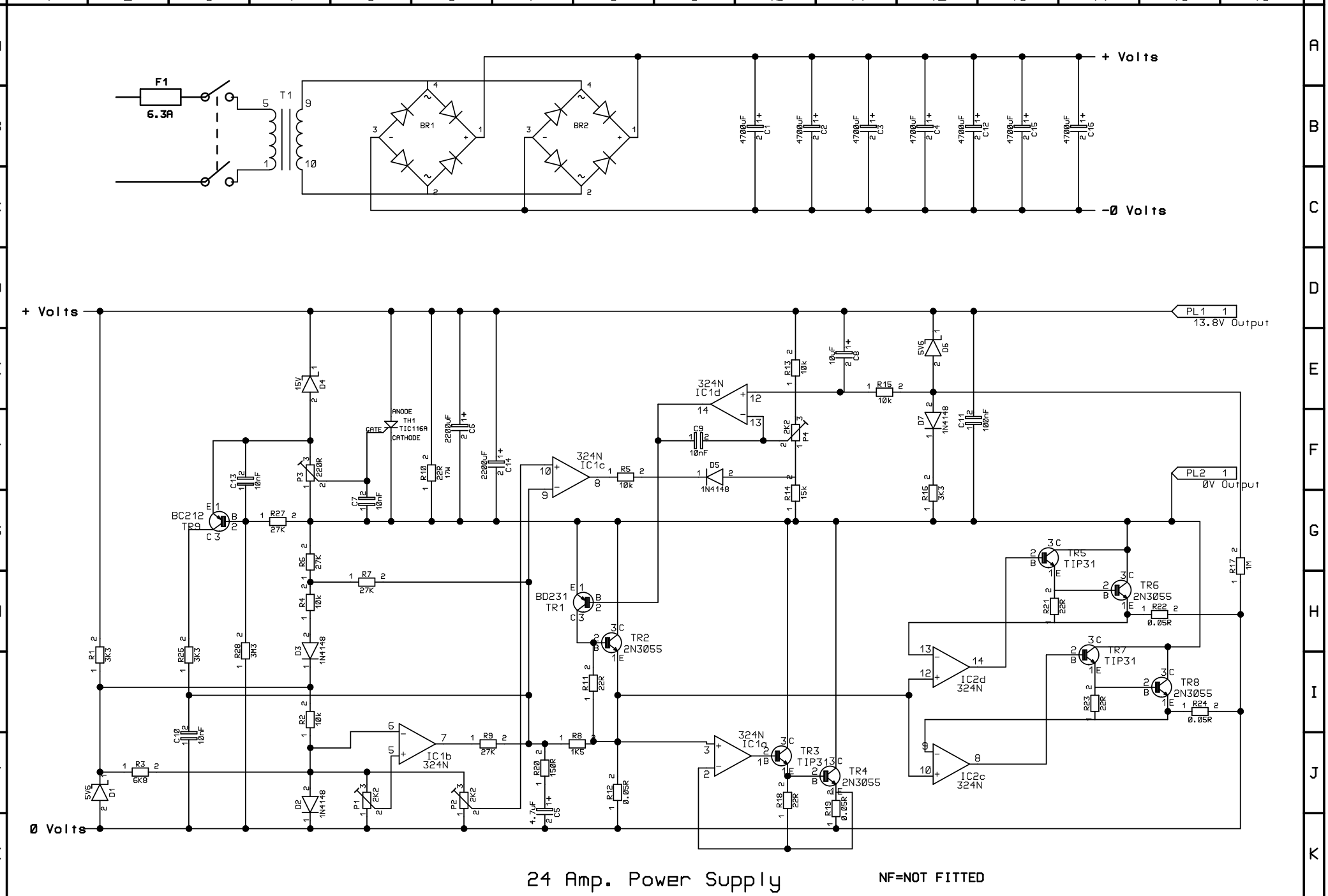

24 Amp. Power Supply

NF=NOT FITTED